Bow Mount

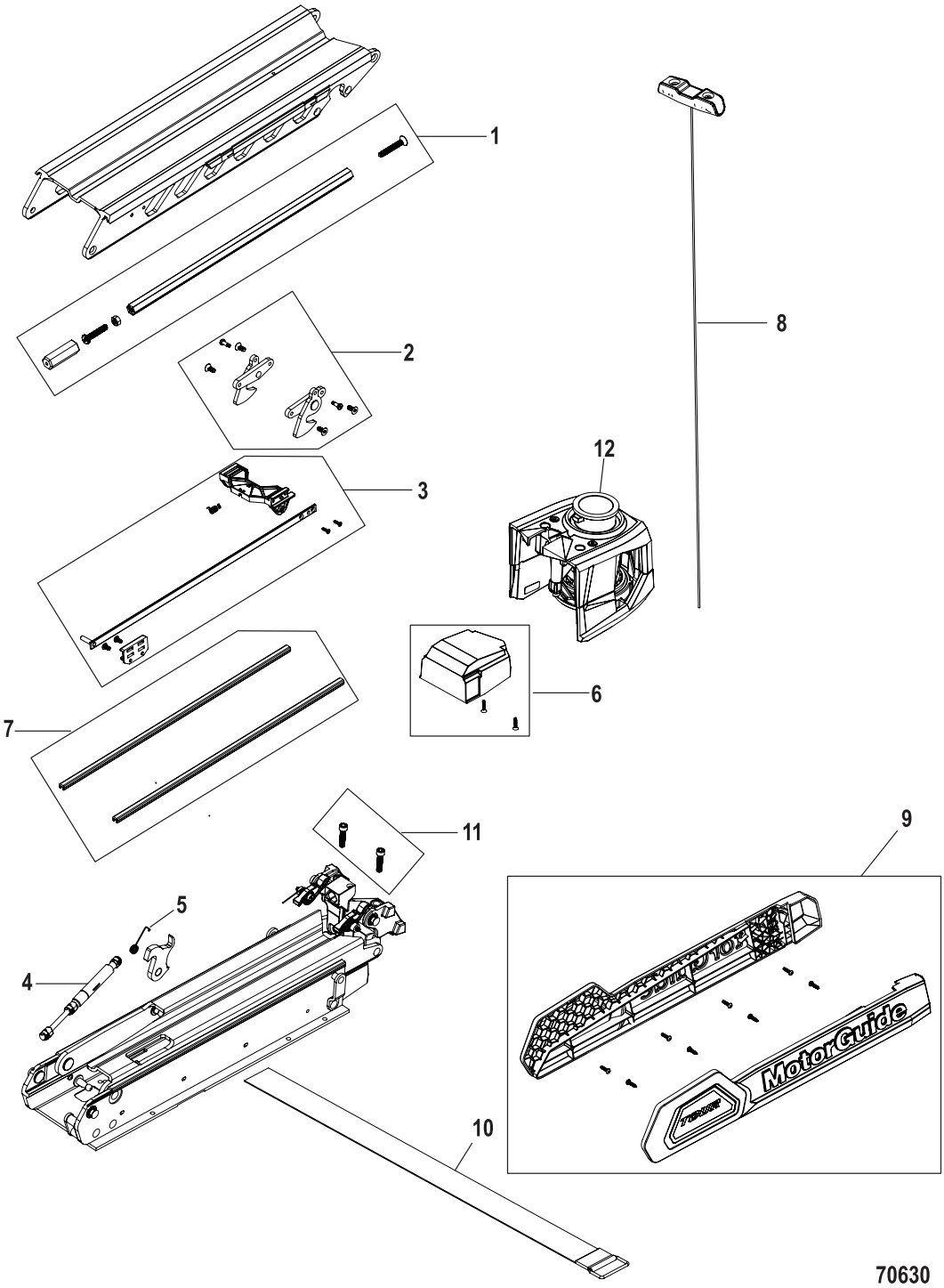

Cat.# 90-8M0172449

Bow Mount

22y4/1価格改定

Ref #	Part Class	Part Number	Description	Comments	Qty	Note
-	0000	8M4004441	Bow Mount W/O 360 Breakaway		1	
1	0000	8M4004745	Bounce Buster Kit	￥6000	1	
2	0000	8M4003376	Deploy Latch Asm Kit	￥12000	1	
3	0000	8M4003357	Release Linkage Kit	￥4500	1	
4		8M4005555	Gas Spring		1	
5	0000	8M4004060	Stow Latch Spring Kit	￥1300	1	
6	0000	8M4003353	Front Decket Kit	￥3500	1	
7	0000	8M4003356	Decket Rail Bumper	￥2000	1	
8	0000	8M4004068	Stow Handle/Cable Kit	￥3000	1	
9	0000	8M4003354	Side Decket Kit	￥7500	1	
10	0000	8M4004181	Strap	￥2650	1	
11	0000	8M4003352	Screw Kit	￥1500	1	
12	0000	8M4004059	360 Breakaway Kit	￥21000	1	